Reducing the Effects of Environmental Issues

Exam code: 0620 & 0971

Download PDF

Written by: Caroline Carroll
Reviewed by: Stewart Hird
Updated on 30 September 2025

Reducing the effects of environmental issues

- Two of the main environmental issues are climate change and acid rain
- There are strategies that can be used to reduce the impact of these issues

Strategies to reduce climate change

- The production of greenhouse gases, specifically carbon dioxide and methane, needs to be reduced drastically to reduce climate change

Reducing carbon dioxide emissions

- Some measures that can be taken include:
  - Being more 'responsible consumers' of energy by:
    - Using **hydrogen** and **renewable** energy supplies such as **solar** or **wind** energy instead of burning fossil fuels
    - Using more fuel-efficient vehicles, e.g. electric and hybrid cars
    - Reducing the number of vehicles on the road, e.g. using public transport, car-sharing
    - Recycling or reusing products made from crude oil and its derivatives
    - Reducing household energy consumption, e.g. turning lights out, using more efficient appliances
  - Reducing deforestation and / or re-forestation
    - Planting more trees, can help reduce the amount of atmospheric carbon dioxide through photosynthesis

Reducing methane emissions

- Reduce the amount of livestock farming
  - Methane is produced during digestion in animals

Strategies to reduce acid rain

- Acid rain is caused by oxides of nitrogen and sulfur dioxide

Help me understand

Stuck on something?

Ask questions and get help with exactly what you're revising.

Got it

- Catalytic convertors in vehicles can be used to remove oxides of nitrogen

Reducing sulfur dioxide emissions

- Using fuels which contain low levels of sulfur
- Flue gas desulfurisation
  - This is the main way to reduce sulfur dioxide emissions
  - Waste gases from coal fired power stations are passed into a scrubbing chamber
  - They are sprayed with a wet slurry of calcium oxide and calcium carbonate
  - The calcium compounds react with sulfur dioxide to produce calcium sulfate

Sulfur dioxide scrubber

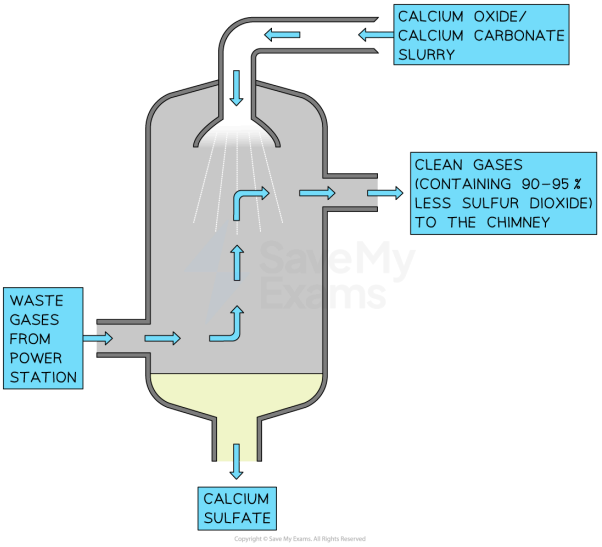

The scrubber sprays a lime slurry over the waste gases to remove 90 – 95% of the sulfur dioxide

Examiner Tips and Tricks

There are many other ways that carbon dioxide, methane, oxides of nitrogen and sulfur dioxide can be reduced, e.g. by reducing energy usage to reduce CO_2 emissions but it is only the examples stated above that you need to know.

Oxides of nitrogen in car engines

Extended tier only

Oxides of nitrogen

and blast furnaces
- Exhaust gases also contain unburned hydrocarbons and carbon monoxide
- Cars are fitted with catalytic converters which form a part of their exhaust systems
- Their function is to render these exhaust gases harmless

Catalytic converters

- They contain a series of **transition metal catalysts** including platinum and rhodium
- The metal catalysts are in a **honeycomb** within the converter to increase the surface area available for reaction
- A series of redox reactions occurs which neutralises the pollutant gases
- Carbon monoxide is oxidised to carbon dioxide:

$$2CO + O_2 \rightarrow 2CO_2$$

- Oxides of nitrogen are reduced to N_2 gas:

$$2NO \rightarrow N_2 + O_2$$

$$2NO_2 \rightarrow N_2 + 2O_2$$

- A single reaction can summarise the reaction of nitrogen monoxide and carbon monoxide within a catalytic convertor:

$$2NO + 2CO \rightarrow N_2 + 2CO_2$$

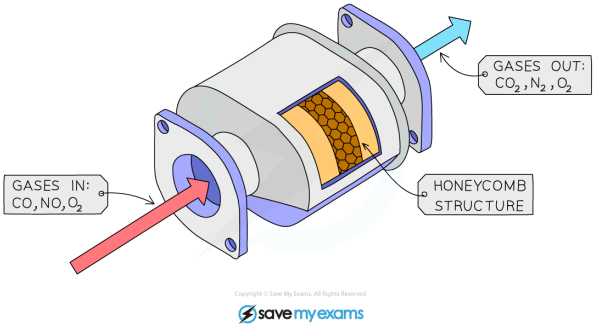

Catalytic converters are designed to reduce the polluting gases produced in car exhausts

- Unburned hydrocarbons can also be oxidised to carbon dioxide and water:

$$C_8H_{18} + 12\tfrac{1}{2}O_2 \rightarrow 8CO_2 + 9H_2O$$

Teacher only

New! Exclusive Teacher-Only Questions

Fresh, expert-written questions

Students can't access them

Test yourself

Flashcards

Was this revision note helpful? Yes No

Previous

Next

Course

Study tools

All topics

Resources

Learning Hub

Scholarship

Join

Past Papers

Solution Banks

Sitemap

Company

About us

Exam Specificity

Content Quality

Promotions

Jobs

Terms

Privacy

Cookie Policy

Help and Support

Dashboard

Overview

Brand ambassador

Profile

Subscription

Settings

Log out

Subjects

Biology

Chemistry

Physics

Maths

Geography

English Literature

Psychology

All Subjects

© Copyright 2015–2026 Save My Exams Ltd. All Rights Reserved.